销售部确认:	日期:	生产部确认:	日期:

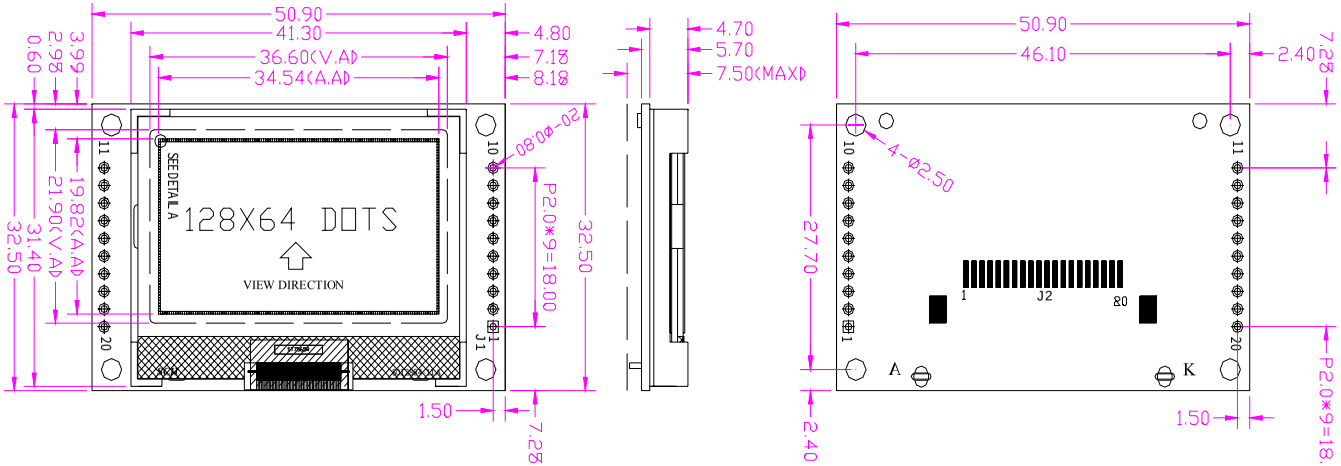

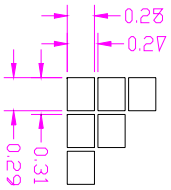

DETAIL A 1:20

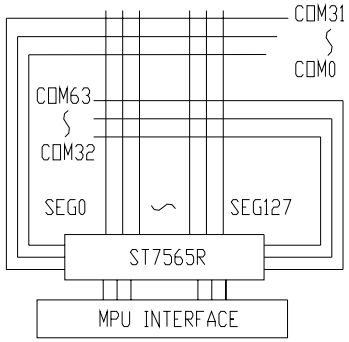

Pin No.	Pin Description
J1 or J2	
1	NC
2	/CS
3	/RES
4	AO
5	WR
6	RD
7	DB0
8	DB1
9	DB2
10	DB3
11	DB4
12	DB5
13	DB6
14	DB7
15	VDD
16	VSS
17	C86
18	P/S
19	LED+
20	LED-

VER	REVISION RECORD	DATE
1.0	初版发行	09.11.23

LCM SPECIFICATION

北京瑞显电子科技有限公司

DISPLAY TYPE: FSTN POSITIVE	LCD CONTROLLER: ST7565R	TITLE: LCM外形尺寸图	VER: 1.0
LCD COLOR MODE: BLACK-WHITE	BACK LIGHT:WHITE,BLUE(IF=30~36mA)	FILE NAME: RX12864-11A	SCALE: 1:1
DRIVING METHOD : 1/65DUTY,1/9BAIS	OPERATING TEMP: -20°C-+70°C	DRAWN NO.:	UNIT: mm
OPERATING VOLTAGE: 3.3V OR 5.0V	STORAGE TEMP: -30°C-+80°C	DRAWN: / APPROVED:	
VIEWING DIRECTIVE: 6:00		CHECKED: / DATE:	PAGE: 1/1