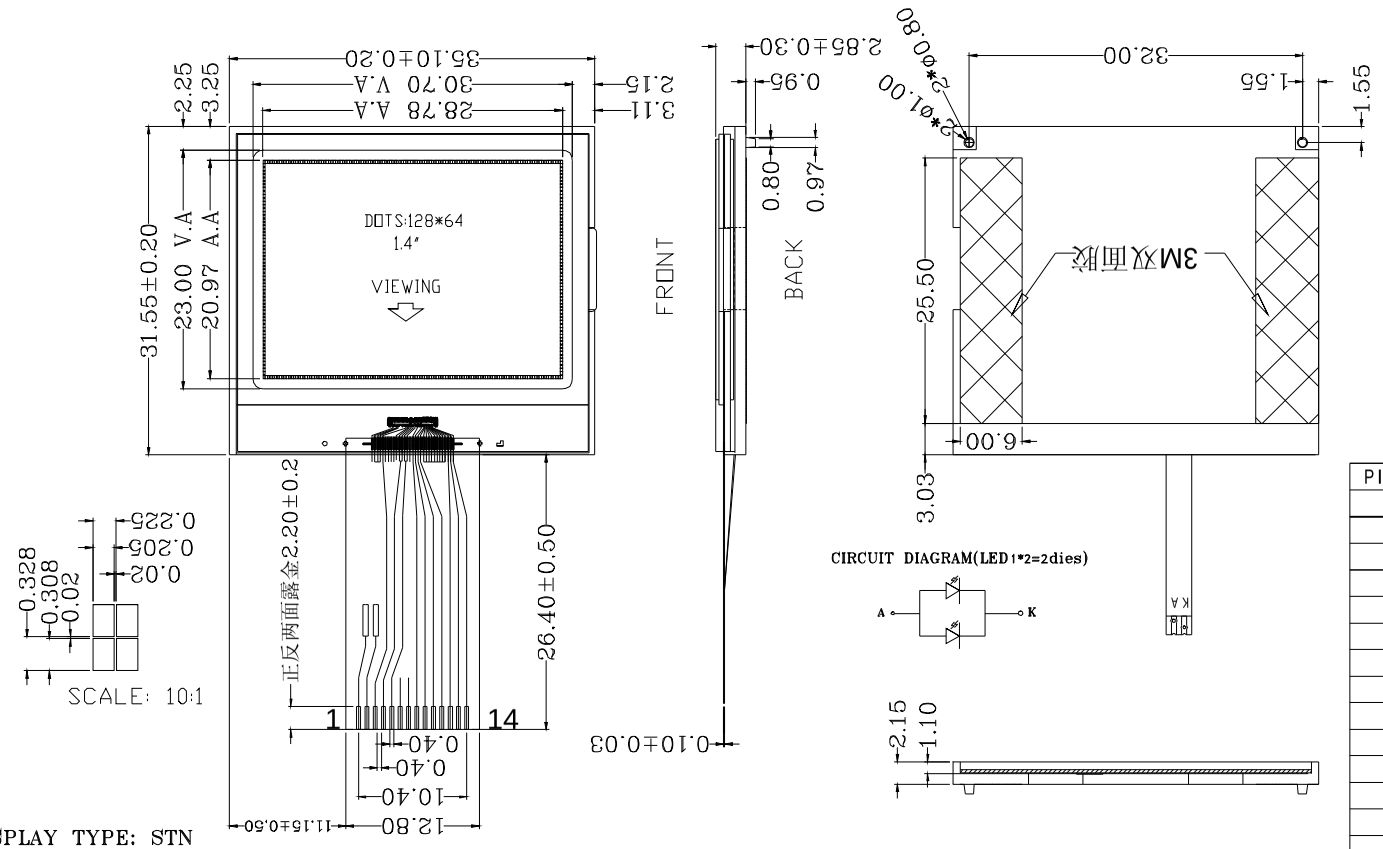

PIN NO.	SYMBOL
1	K
2	A
3	VG
4	XVO
5	VO
6	NC
7	NC
8	VSS
9	VDD
10	D7
11	D6
12	A0
13	RES
14	CS

DISPLAY TYPE: STN
POLARIZER: TRANSFLECTIVE
VIEWING DIRECTION: 12:00-CLOCK
DRIVE METHOD: 1/64DUTY,1/9BIAS
OPERATING VOLTAGE: 3.0V
OPERATING TEMP: -10 TO +60 Deg.C
STORAGE TEMP: -20 TO +70 Deg.C
CONNECTOR: COG+PIN
UNSIGNED TOLERANCE: ±0.20
CONTROLLER: ST7567
LED BACKLIGHT: WHITE
LED BACKLIGHT OPERATING VOLTAGE: 3.0V
LED BACKLIGHT OPERATING ELECTRIC CURRENT: ≤30MA